◎ MINI TYPE LED LAMPS
小型化發光二極體指示燈

GH-2035-01 Series Electro-Optical Characteristics:

Code for parts GH-XXXXX	Lighting Color	Material	V_F (V)		λ (nm)			I_V (mcd)	Internal Circuit
			Typ	Max	λ_D	λ_P	$\Delta\lambda$	Min	
RQ2035TP-01E	Red	AlGaInP	2.0	2.5	630	640	20	95	
OV2035TP-01E	Orange	AlGaInP	2.2	2.7	624	635	20	95	
YU2035TP-01E	Yellow	AlGaInP	2.0	2.5	590	595	20	200	
GB2035TP-01J	Green	AlGaInP	2.0	2.5	574	575	20	95	
G32035TP-01H	Green	GaInN	3.3	3.8	525	520	30	190	
BL2035TP-01H	Blue	GaInN	3.50	4.00	465	460	30	50	
WV2035TP-01H	White	GaInN	3.50	4.00	X=0.22~0.38 Y=0.22~0.36			100	

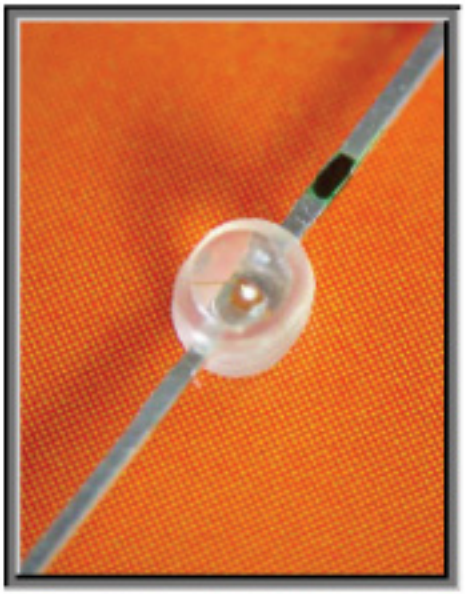

◎ Package Outline Drawing:

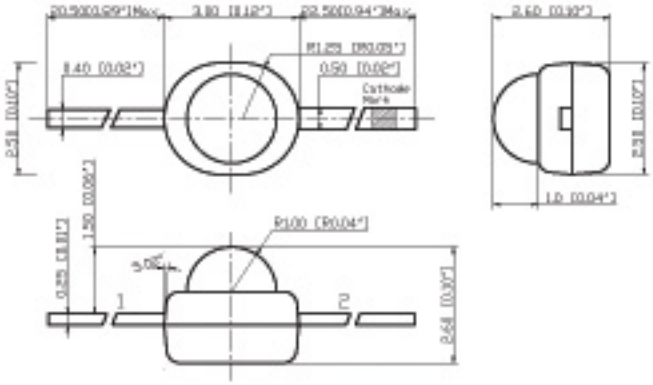

NOTES: 1. All dimensions are in millimeters (inches);
2. Tolerances are ±0.2mm (0.008inch) unless otherwise noted;
3. Resin color: water clear.

✸ Soldering iron

Basic spec is ≤ 5sec when 260℃. If temperature is higher, time should be shorter(+10℃ → -1sec).Power dissipation of iron should be smaller than 15W,and temperatures should be controllable .Surface temperature of the device should be under 230℃.

✸ Recommended Reflow Soldering Profile.

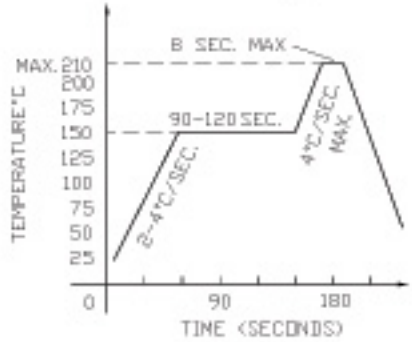

◎ Absolute Maximum Ratings:

Series	I_F (mA)	*I_{FP} (mA)	V_R (V)	T_{OP} (℃)	T_{ST} (℃)
GH-2035-01 Series	30	120	5	-40~+80	-40~+85

✸Condition for I_{FP} is pulse of 1/10 duty and 0.1msec width